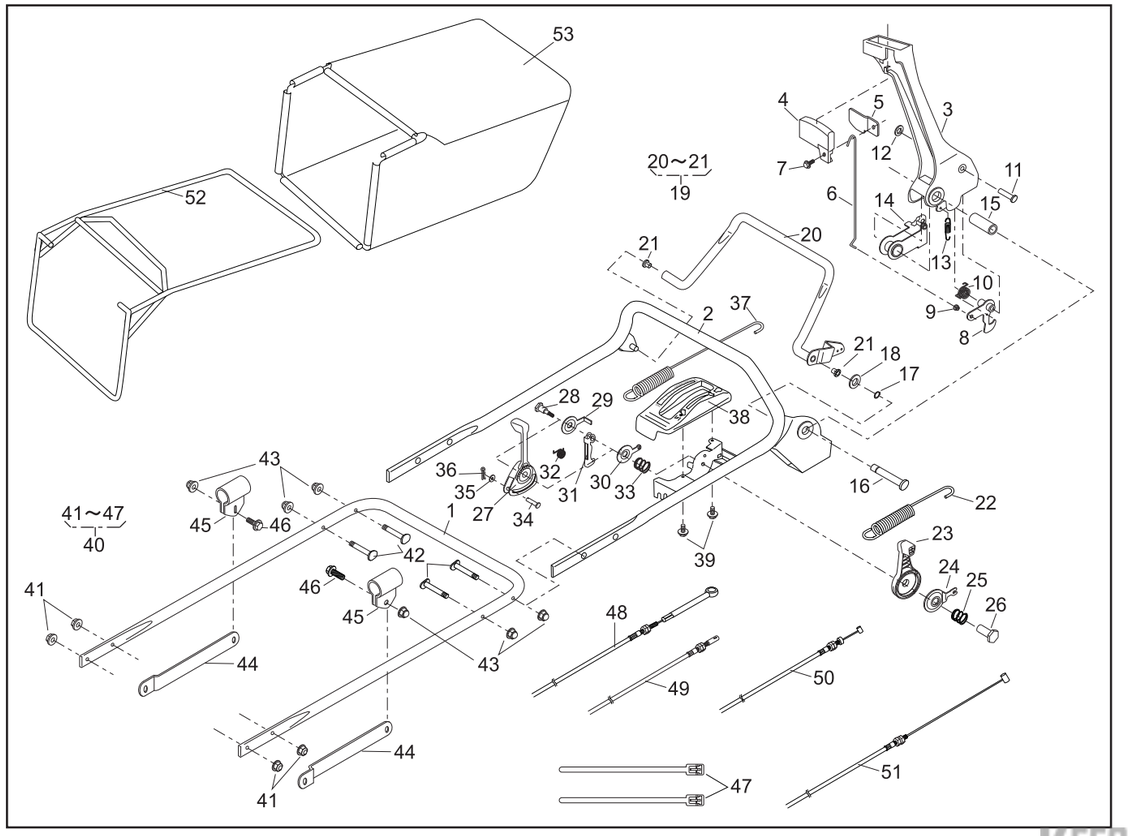


# PARTS LIST

46014-356-00

| REF. No. | PARTS No. | PARTS NAME | HANDLE-HST-Pro Q'TY | INCLUDING | | | PRICE( ) | 1/2 RECOMM.(%) Lot.100 | | Dec.29,2005 REMARKS |
|---|---|---|---|---|---|---|---|---|---|---|
| 1 | 51027 249 | HANDLE | 1 | | | | | | | |
| 2 | 51027 250 | HANDLE | 1 | | | | | | | |
| 3 | 11095 172 | LEVER(BBC) | 1 | | | | | | | |
| 4 | 36110 102 | BUTTON | 1 | | | | | | | |
| 5 | 11049 109 | SLIDE PLATE | 1 | | | | | | | |
| 6 | 64014 336 | SHAFT | 1 | | | | | | | |
| 7 | 335N 0612 | FLANGE BOLT | 1 | | | | | | | |
| 8 | 71203 135 | ARM C.P. | 1 | | | | | | | |
| 9 | 76007 183 | BUSH | 1 | | | | | | | |
| 10 | 68013 371 | SPRING | 1 | | | | | | | |
| 11 | 31056 127 | GIB-HEADED PIN | 1 | | | | | | | |
| 12 | 576V 0600 | PUSH NUT | 1 | | | | | | | |
| 13 | 68013 372 | SPRING | 1 | | | | | | | |
| 14 | 11109 111 | LINK | 1 | | | | | | | |
| 15 | 61023 190 | SLEEVE | 1 | | | | | | | |
| 16 | 64014 337 | SHAFT | 1 | | | | | | | |
| 17 | 812V 0800 | C-SNAP RING | 1 | | | | | | | |
| 18 | 613L 0800 | PLAIN WASHER | 1 | | | | | | | |
| 19 | 71161 114 09 | LEVER ASS'Y | 1 | | | | | | | |
| 20 | | LEVER | | 1 | | | | | | |
| 21 | 76007 131 | BUSH | | 2 | | | | | | |
| 22 | 68013 385 | SPRING | 1 | | | | | | | |
| 23 | 91010 169 | THROTTLE LEVER(GXV120/GXV160) | 1 | | | | | | | |
| 24 | 61003 113 | THRUST PLATE | 1 | | | | | | | |
| 25 | 68013 356 | SPRING | 1 | | | | | | | |
| 26 | 31058 168 | HEXAGON NUT | 1 | | | | | | | |
| 27 | 11095 162 | LEVER(HST) | 1 | | | | | | | |
| 28 | 31057 249 | HEXAGON BOLT | 1 | | | | | | | |

KEES VAN DER SPEK
TUIN EN PARKMACHINES ★ TER AAR

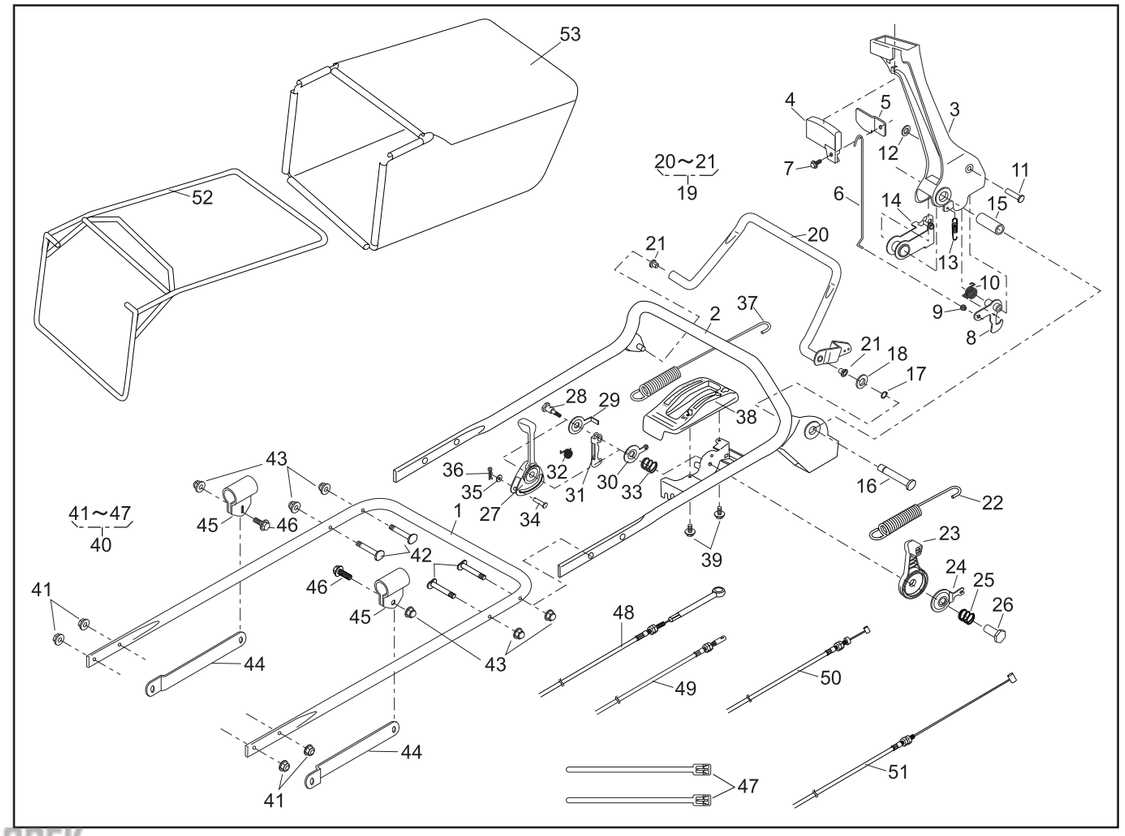


# PARTS LIST

46014-356-00

| REF. No. | PARTS No. | PARTS NAME | HANDLE-HST-Pro Q'TY | INCLUDING | | | PRICE( ) | 2/2 RECOMM.(%) Lot.100 | | Dec.29,2005 REMARKS |
|---|---|---|---|---|---|---|---|---|---|---|
| 29 | 61003 118 | THRUST PLATE | 1 | | | | | | | |
| 30 | 11049 108 | SLIDE PLATE | 1 | | | | | | | |
| 31 | 11109 112 | LINK | 1 | | | | | | | |
| 32 | 68013 369 | SPRING | 1 | | | | | | | |
| 33 | 68013 356 | SPRING | 1 | | | | | | | |
| 34 | 31056 126 | GIB-HEADED PIN | 1 | | | | | | | |
| 35 | 613L 0600 | PLAIN WASHER | 1 | | | | | | | |
| 36 | 733L 0600 | SNAP PIN | 1 | | | | | | | |
| 37 | 68013 375 | SPRING | 1 | | | | | | | |
| 38 | 71900 811 | COVER ASS'Y | 1 | | | | | | | |
| 39 | 470L 0514 | (+)TAPPING SCREW | 2 | | | | | | | |
| 40 | 71900 845 | BOLT SET | 1 | | | | | | | |
| 41 | 569L 0800 | FLANGE NYLON NUT | | 4 | | | | | | |
| 42 | 31057 256 | HEXAGON BOLT | | 4 | | | | | | |
| 43 | 583L 0800 | FLANGE CAP NUT | | 6 | | | | | | |
| 44 | 71900 846 | BAR SET | | 1 | | | | | | |
| 45 | 11012 132 | HANGER BAND | | 2 | | | | | | |
| 46 | 31057 181 | HEXAGON BOLT | | 2 | | | | | | |
| 47 | 68028 103 | WIRE BAND | | 2 | | | | | | |
| 48 | 91003 178 | CONTROL CABLE | 1 | | | | | | | |
| 49 | 91003 179 | CONTROL CABLE | 1 | | | | | | | |
| 50 | 91001 329 | THROTTLE WIRE(GXV120/GXV160) | 1 | | | | | | | |
| 51 | 91003 169 | CONTROL CABLE(BBC) | 1 | | | | | | | |
| 52 | 11062 178 | FRAME C.P. | 1 | | | | | | | |
| 53 | 36098 132 | GRASS BAG C.P.(KAAZ) | 1 | | | | | | | |
| 54 | | | | | | | | | | |
| 55 | | | | | | | | | | |
| 56 | | | | | | | | | | |