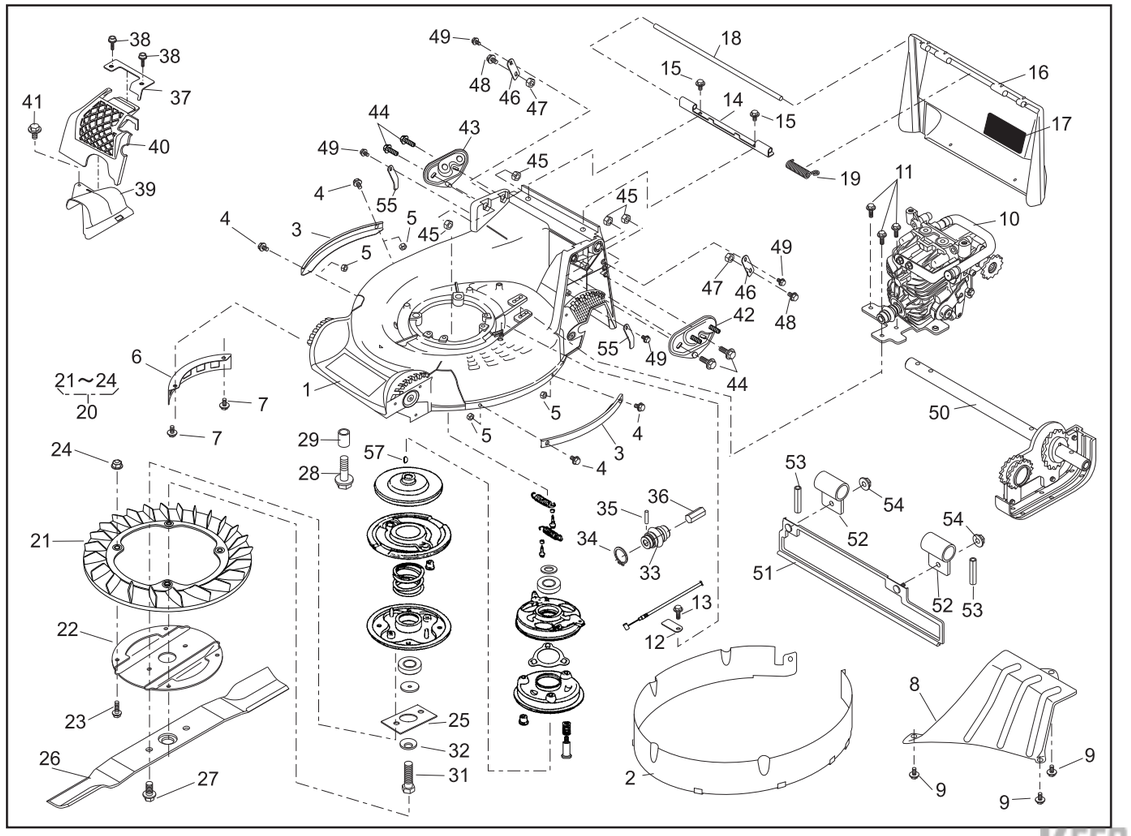

PARTS LIST

46014-350-00

REF. No.	PARTS No.	PARTS NAME	GRASS-CUTTING-HST-Pro Q'TY	INCLUDING			PRICE( )	1/2 RECOMM.(%) Lot.100		Dec.29,2005 REMARKS
1	51043 147 42	HOUSING	1							
2	36068 197	GUARD	1							
3	51090 117 09	PROTECTOR	2							
4	335L 0616	FLANGE BOLT	4							
5	512L 0600	HEXAGON NUT	4							
6	36065 180	COVER	1							
7	342L 0612	FLANGE TAPPING BOLT	2							
8	36065 436	COVER	1							
9	342L 0612	FLANGE TAPPING BOLT	3							
10		HST UNIT	1							
11	342L 0612	FLANGE TAPPING BOLT	3							
12	11113 407	STAY	1							
13	342L 0612	FLANGE TAPPING BOLT	1							
14	11113 292	STAY	1							
15	342L 0612	FLANGE TAPPING BOLT	2							
16	36068 196 46	GUARD	1							
17	36080 149	RUBBER SHEET	1							
18	64014 324	SHAFT	1							
19	68013 336	SPRING	1							
20	71082 111	FAN ASSY	1							
21	51125 103	FAN		1						
22	11102 151	HOLDER		1						
23	31062 169	PRE-COAT LOCK BOLT		4						
24	579L 0600	FLANGE NUT		4						
25	61024 208	SPACER	1							
26	91014 159	BLADE	1							
27	31057 197	HEXAGON BOLT	2							
28	31057 243	HEXAGON BOLT	4							
29	61024 142	SPACER	3							

KEES VAN DER SPEK
TUIN EN PARKMACHINES ★ TER AAR

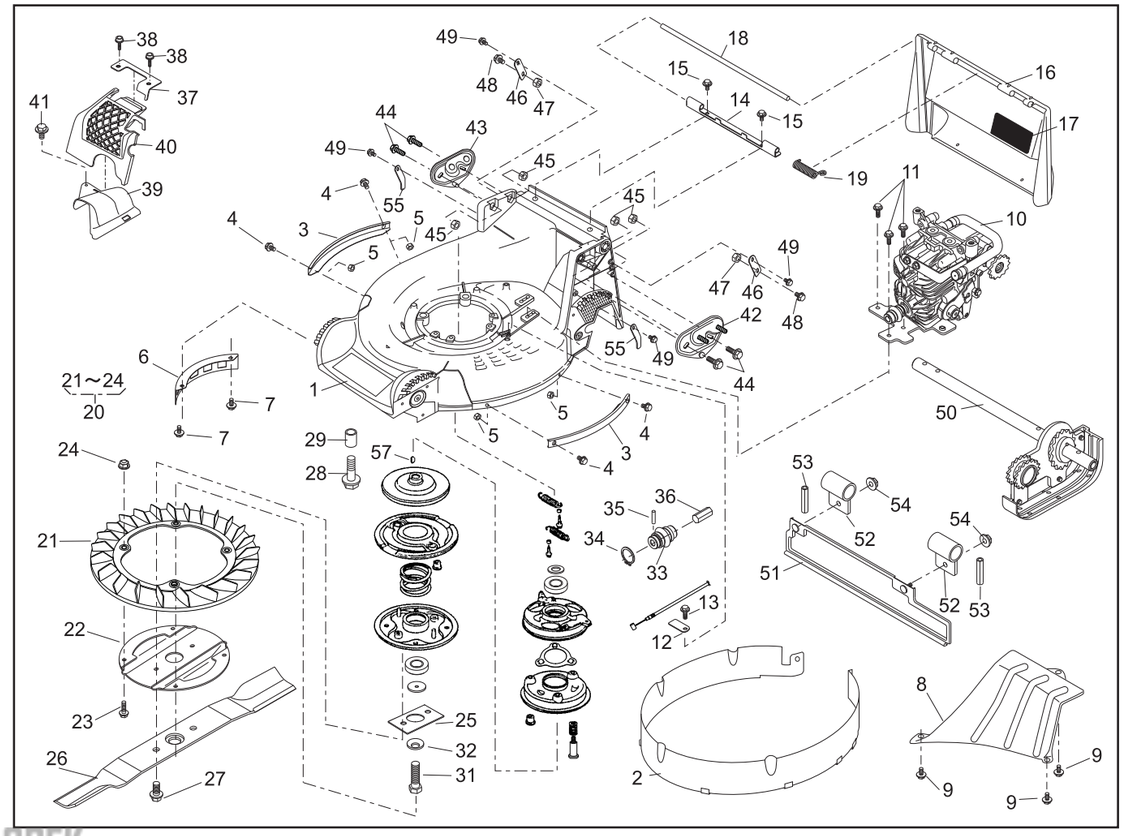

PARTS LIST

46014-350-00

REF. No.	PARTS No.	PARTS NAME	GRASS-CUTTING-HST-Pro Q'TY	INCLUDING			PRICE( )	2/2 RECOMM.(%) Lot.100		Dec.29,2005 REMARKS
30	71067 106	BRAKE ASSY	1							
31	31057 196	HEXAGON BOLT	1							
32	671V 1000	SPRING WASHER	1							
33	91097 101	UNIVERSAL JOINT	1							
34	812V 2000	C-SNAP RING		1						
35	717B 0418	PARALLEL PIN		1						
36	64014 368	SHAFT	1							
37	11050 181	FIXING PLATE	1							
38	423L 0820	SOCKET SCREW FLANGE	2							
39	36065 453	COVER	1							
40	36065 454	COVER	1							
41	342L 0616	FLANGE TAPPING BOLT	1							
42	51116 149	HANDLE BRACKET(L)	1							
43	51116 150	HANDLE BRACKET(R)	1							
44	31057 255	HEXAGON BOLT	4							
45	512L 0800	HEXAGON NUT	4							
46	11113 408	STAY	2							
47	512L 0800	HEXAGON NUT	2							
48	31057 181	HEXAGON BOLT	2							
49	342L 0612	FLANGE TAPPING BOLT	4							
50		SHAFT UNIT	1							
51	36046 154	SAFETY GUARD	1							
52	11012 126	HANGER BAND	2							
53	711V 0522	SPRING PIN	2							
54	569L 0600	FLANGE NYLON NUT	2							
55	11113 415	SATY	2							
56	122039	ENGINE:HONDA GXV160H2-SFL1-R280	1							
57		KEY	1							
58										