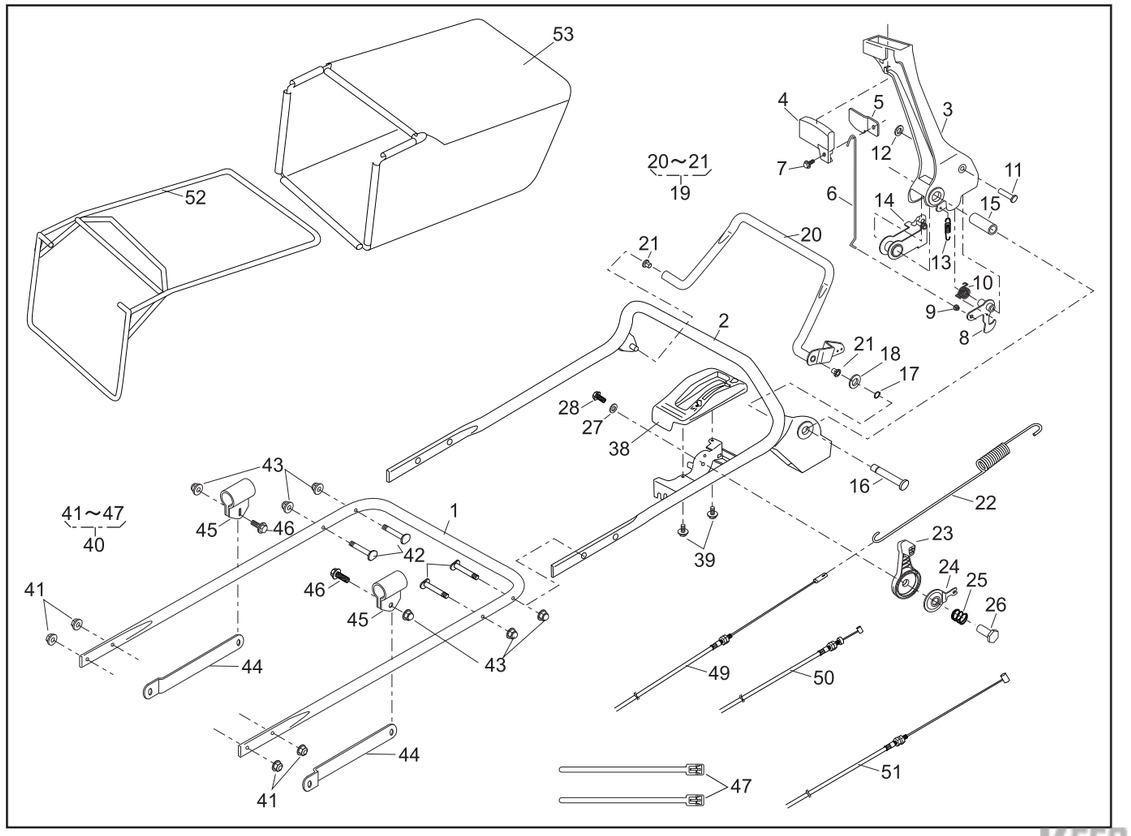

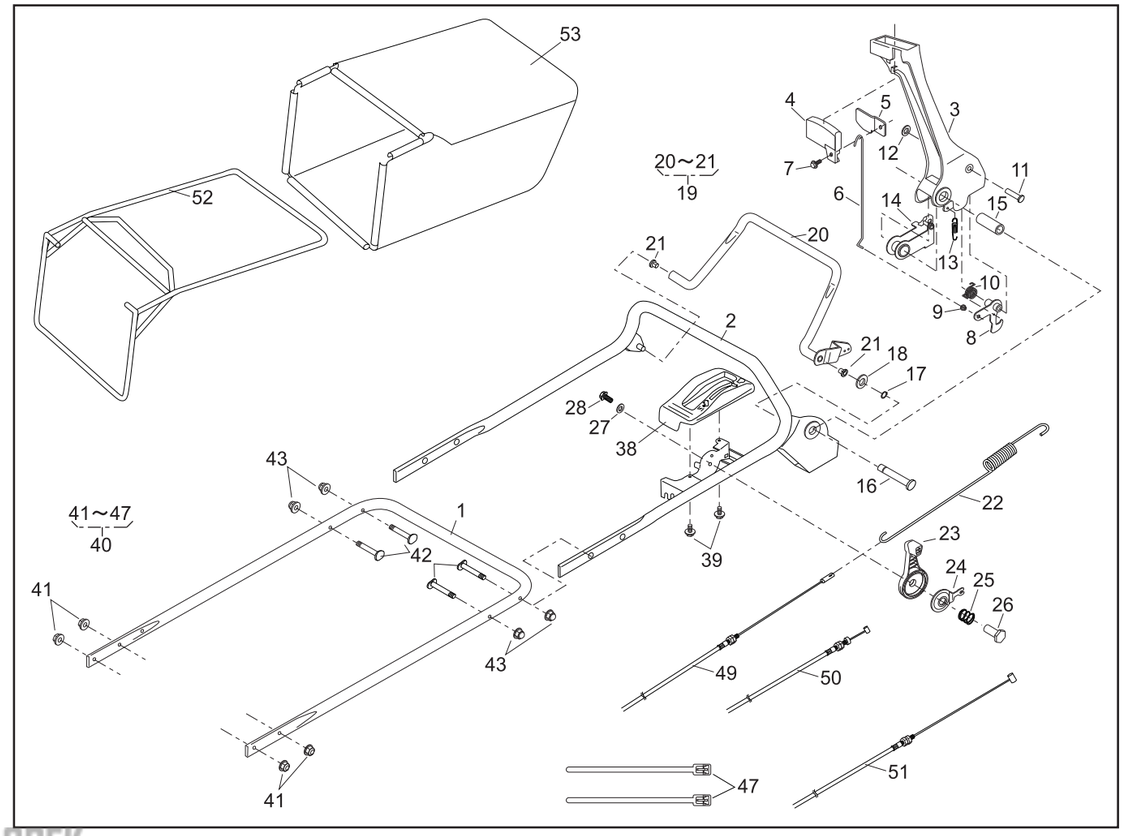

KEES VAN DER SPEK
TUIN EN PARKMACHINES ★ TER AAR

PARTS LIST

46014-412-00

NOTE	REF. No.	PARTS No.	PARTS NAME	HANDLE-ROLLER-PRO Q'TY	INCLUDING			PRICE( )	1/2 RECOMM.(%) Lot.100		05. Jun, 2006 REMARKS
	1	51027 249	HANDLE	1							
	2	51027 250	HANDLE	1							
	3	11095 172	LEVER(BBC)	1							
	4	36110 102	BUTTON	1							
	5	11049 109	SLIDE PLATE	1							
	6	64014 336	SHAFT	1							
	7	335N 0612	FLANGE BOLT	1							
	8	71203 135	ARM C.P.	1							
	9	76007 183	BUSH	1							
	10	68013 371	SPRING	1							
	11	31056 127	GIB-HEADED PIN	1							
	12	576V 0600	PUSH NUT	1							
	13	68013 372	SPRING	1							
	14	11109 111	LINK	1							
	15	61023 190	SLEEVE	1							
	16	64014 337	SHAFT	1							
	17	812V 0800	C-SNAP RING	1							
	18	613L 0800	PLAIN WASHER	1							
	19	71161 114 09	LEVER ASS'Y	1							
	20		LEVER		1						
	21	76007 131	BUSH		2						
	22	68013 382	SPRING	1							
	23	91010 169	THROTTLE LEVER(GXV120/GXV160)	1							
	24	61003 113	THRUST PLATE	1							
	25	68013 356	SPRING	1							
	26	31058 168	HEXAGON NUT	1							
	27	68036 125	WASHER	1							
	28	318L 0612	(+)HEX.BOLT(SW)	1							

PARTS LIST

46014-412-00

NOTE	REF. No.	PARTS No.	PARTS NAME	HANDLE-ROLLER-PRO Q'TY	INCLUDING			PRICE( )	2/2 RECOMM.(%) Lot.100		05. Jun, 2006 REMARKS
	29										
	30										
	31										
	32										
	33										
	34										
	35										
	36										
	37										
	38	71900 797	COVER ASS'Y	1							
	39	470L 0514	(+)TAPPING SCREW	2							
	40	71900 845	BOLT SET	1							
	41	569L 0800	FLANGE NYLON NUT		4						
	42	31057 256	HEXAGON BOLT		4						
	43	583L 0800	FLANGE CAP NUT		6						
	44	71900 846	BAR SET		1						
	45	11012 132	HANGER BAND		2						
	46	31057 181	HEXAGON BOLT		2						
	47	68028 103	WIRE BAND		2						
	48										
	49	91003 165	CONTROL CABLE	1							
	50	91001 329	THROTTLE WIRE(GXV120/GXV160)	1							
	51	91003 169	CONTROL CABLE(BBC)	1							
	52	11062 178	FRAME C.P.	1							
	53	36098 132	GRASS BAG C.P.(KAAZ)	1							
	54										
	55										
	56										