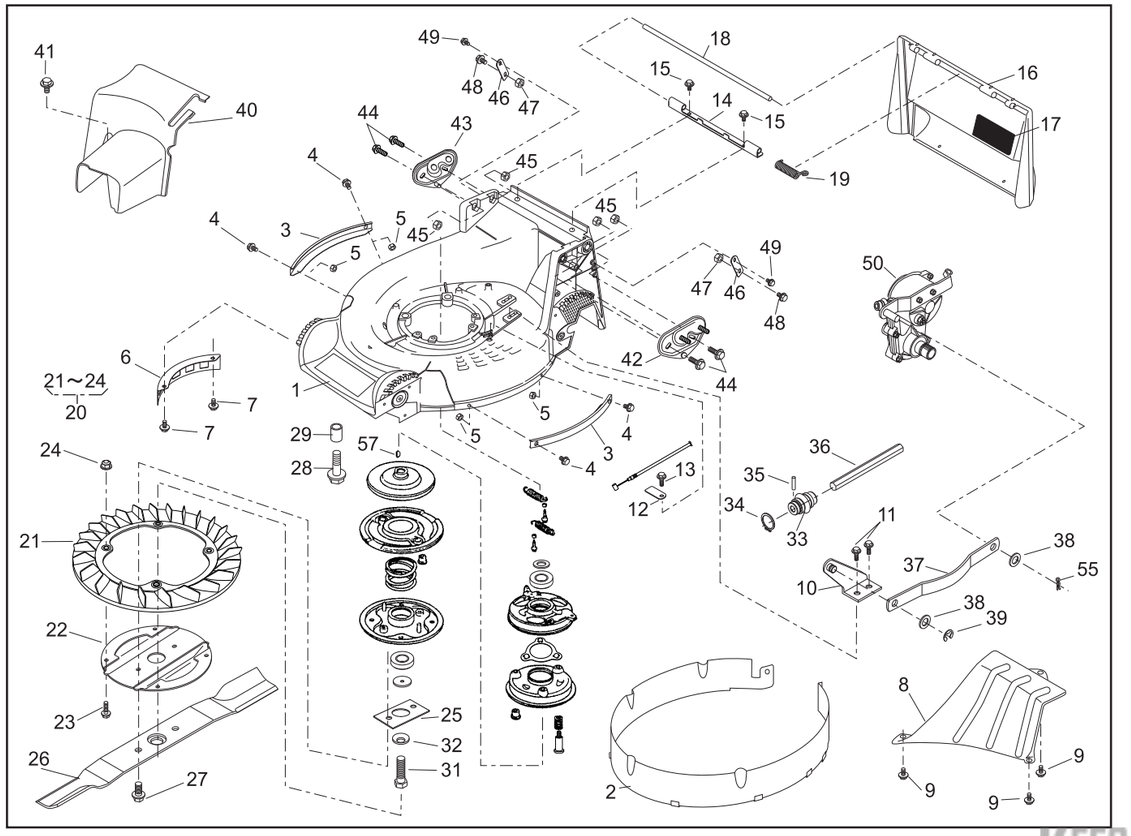


# PARTS LIST

46014-411-00

| NOTE | REF. No. | PARTS No. | PARTS NAME | GRASS-CUTTING Q'TY | INCLUDING | | | PRICE( ) | 1/2 RECOMM.(%) Lot.100 | | 02. Jun, 2006 REMARKS |
|---|---|---|---|---|---|---|---|---|---|---|---|
| | 1 | 51043 147 42 | HOUSING | 1 | | | | | | | |
| | 2 | 36068 197 | GUARD | 1 | | | | | | | |
| | 3 | 51090 117 09 | PROTECTOR | 2 | | | | | | | |
| | 4 | 335L 0616 | FLANGE BOLT | 4 | | | | | | | |
| | 5 | 512L 0600 | HEXAGON NUT | 4 | | | | | | | |
| | 6 | 36065 180 | COVER | 1 | | | | | | | |
| | 7 | 342L 0612 | FLANGE BOLT TAPPING | 2 | | | | | | | |
| | 8 | 36065 436 | COVER | 1 | | | | | | | |
| | 9 | 342L 0612 | FLANGE BOLT TAPPING | 3 | | | | | | | |
| | 10 | 11006 155 | STAY C.P. | 1 | | | | | | | |
| | 11 | 342L 0612 | FLANGE BOLT TAPPING | 2 | | | | | | | |
| | 12 | 11113 407 | STAY | 1 | | | | | | | |
| | 13 | 342L 0612 | FLANGE BOLT TAPPING | 1 | | | | | | | |
| | 14 | 11113 292 | STAY | 1 | | | | | | | |
| | 15 | 342L 0612 | FLANGE BOLT TAPPING | 2 | | | | | | | |
| | 16 | 36068 196 46 | GUARD | 1 | | | | | | | |
| | 17 | 36080 149 | RUBBER SHEET | 1 | | | | | | | |
| | 18 | 64014 324 | SHAFT | 1 | | | | | | | |
| | 19 | 68013 336 | SPRING | 1 | | | | | | | |
| | 20 | 71082 111 | FAN ASSY | 1 | | | | | | | |
| | 21 | 51125 103 | FAN | | 1 | | | | | | |
| | 22 | 11102 151 | HOLDER | | 1 | | | | | | |
| | 23 | 31062 169 | PRE-COAT LOCK BOLT | | 4 | | | | | | |
| | 24 | 579L 0600 | FLANGE NUT | | 4 | | | | | | |
| | 25 | 61024 208 | SPACER | 1 | | | | | | | |
| | 26 | 91014 159 | BLADE | 1 | | | | | | | |
| | 27 | 31057 197 | HEXAGON BOLT | 2 | | | | | | | |
| | 28 | 31057 243 | HEXAGON BOLT | 4 | | | | | | | |
| | 29 | 61024 142 | SPACER | 3 | | | | | | | |

KEES VAN DER SPEK
TUIN EN PARKMACHINES ★ TER AAR

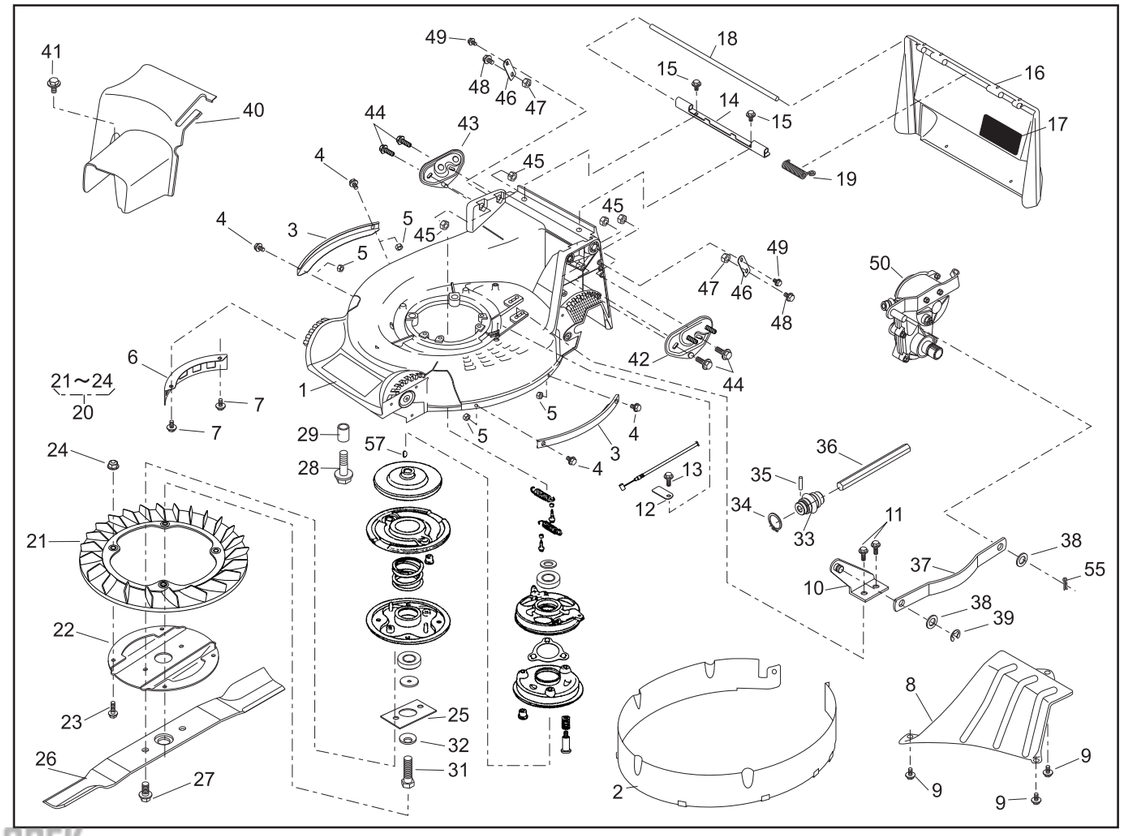


# PARTS LIST

46014-411-00

| NOTE | REF. No. | PARTS No. | PARTS NAME | GRASS-CUTTING Q'TY | INCLUDING | | | PRICE( ) | 2/2 RECOMM.(%) Lot.100 | | 02. Jun, 2006 REMARKS |
|---|---|---|---|---|---|---|---|---|---|---|---|
| | 30 | 71067 106 | BRAKE ASSY | 1 | | | | | | | |
| | 31 | 31057 196 | HEXAGON BOLT | 1 | | | | | | | |
| | 32 | 671V 1000 | CONICAL SPRING WASHER | 1 | | | | | | | |
| | 33 | 91097 101 | UNIVERSAL JOINT | 1 | | | | | | | |
| | 34 | 812V 2000 | C-SNAP RING FOR SHAFT | | 1 | | | | | | |
| | 35 | 717B 0418 | PARALLEL PIN | | 1 | | | | | | |
| | 36 | 64014 359 | SHAFT | 1 | | | | | | | |
| | 37 | 91049 133 | CONNECTOR | 1 | | | | | | | |
| | 38 | 68036 280 | WASHER | 2 | | | | | | | |
| | 39 | 816V 0800 | E-SNAP RING | 1 | | | | | | | |
| | 40 | 36065 438 | COVER | 1 | | | | | | | |
| | 41 | 342L 0616 | FLANGE BOLT TAPPING | 1 | | | | | | | |
| | 42 | 51116 149 | HANDLE BRACKET(L) | 1 | | | | | | | |
| | 43 | 51116 150 | HANDLE BRACKET(R) | 1 | | | | | | | |
| | 44 | 31057 255 | HEXAGON BOLT | 4 | | | | | | | |
| | 45 | 512L 0800 | HEXAGON NUT | 4 | | | | | | | |
| | 46 | 11113 408 | STAY | 2 | | | | | | | |
| | 47 | 512L 0800 | HEXAGON NUT | 2 | | | | | | | |
| | 48 | 31057 181 | HEXAGON BOLT | 2 | | | | | | | |
| | 49 | 342L 0612 | FLANGE BOLT TAPPING | 2 | | | | | | | |
| | 50 | 71008 369 | GEAR CASE ASSY | 1 | | | | | | | |
| | 51 | | | | | | | | | | |
| | 52 | | | | | | | | | | |
| | 53 | | | | | | | | | | |
| | 54 | | | | | | | | | | |
| | 55 | 733L 1000 | SNAP PIN | 1 | | | | | | | |
| | 56 | 122039 | ENGINE:HONDA GXV160H2-SFL1-R280 | 1 | | | | | | | |
| | 57 | | WOOD RUFF KEY | 1 | | | | | | | |
| | 58 | | | | | | | | | | |