# CATALOGUS MET RESERVEONDERDELEN

# : HYDROFOORPOMP 3900 SILENT

KEES VAN DER SPEK
TUIN EN PARKMACHINES ★ TER AAR

Lijst van reserve-onderdelen

# LIJST VAN RESERVE-ONDERDELEN

KEES VAN DER SPEK
BESTELBARE ONDERDELEN

GARDENA Hauswasserwerk 3800 Silent — Art.-Nr. 9064
Hauswasserwerk 3900 Silent — Art.-Nr. 9066

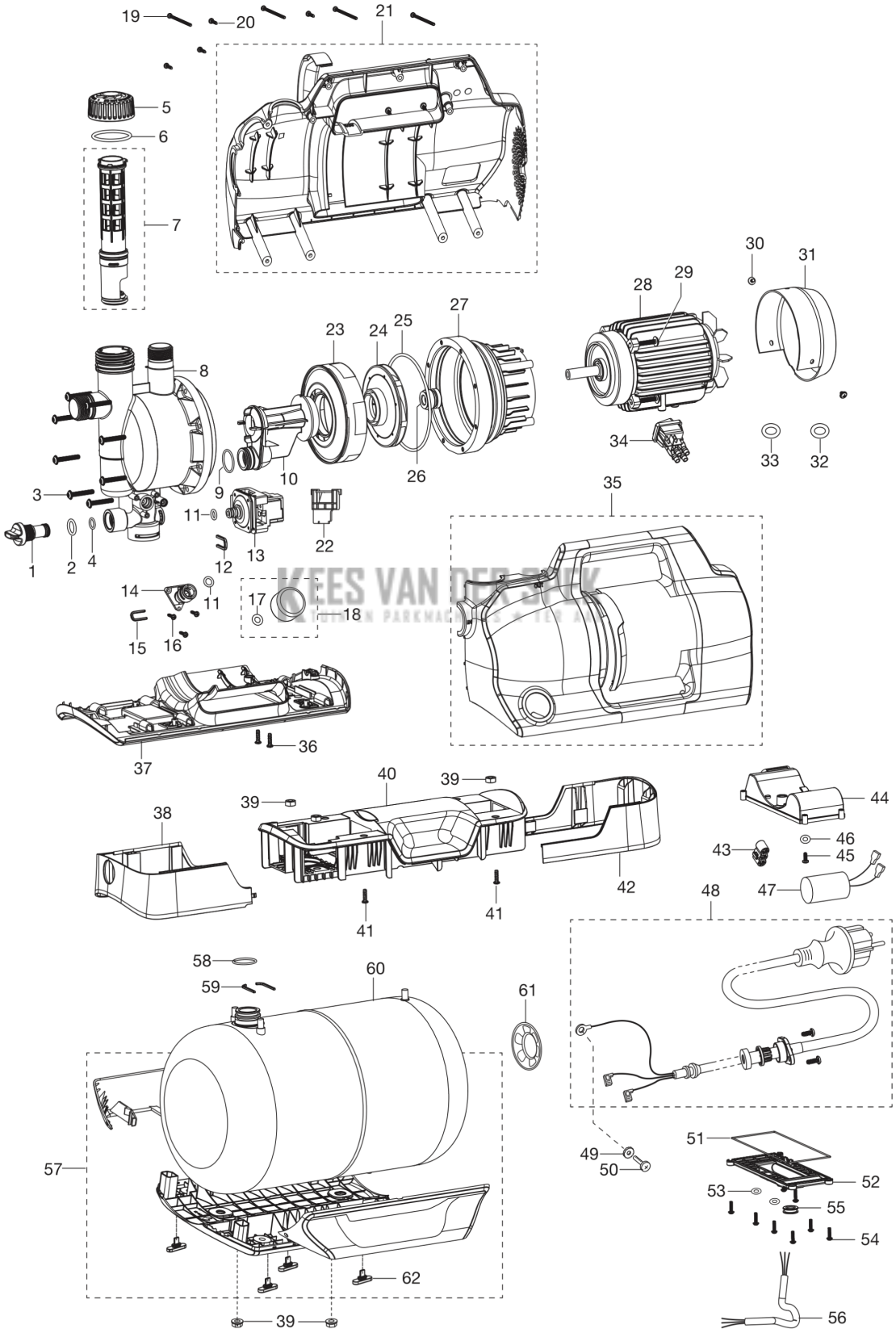

| REF. | | OMSCHRIJVING | OPMERKING | | KIT |
|---|---|---|---|---|---|
| 1 | 538664401 | PLUG | 09064–00.641.00 | 1 | |
| 2 | 538831801 | O-RING | 09050–00.670.01 | 1 | |
| 3 | 538924001 | SCREW | 09050–00.600.98 | 1 | |
| 4 | 546363501 | O-RING | 09064–00.640.01 | 1 | |
| 5 | 538664501 | KAP | 09064–00.600.21 | 1 | |
| 6 | 546359401 | O-RING | 09064–00.600.99 | 1 | |
| 7 | 546965701 | VENTIEL COMPL. | 09064–00.630.00 | 1 | |
| 8 | 538663502 | POMP HUIS | 09066–00.621.00 | 1 | |
| 9 | 578460101 | O-RING | 01707–00.900.05 | 1 | |
| 10 | 538664001 | SPROEIER | 09050–00.621.00 | 1 | |
| 11 | 546366301 | O-RING | 09064–00.660.06 | 1 | |
| 12 | 546364401 | KLEM | 09064–00.600.98 | 1 | |
| 13 | 546366202 | SCHAKELAAR | 09066–00.660.01 (1,5 - 3,0 bar) | 1 | |
| 14 | 538665601 | VERBINDER | 09064–00.600.51 | 1 | |
| 15 | 546366401 | KLEM | 09064–00.600.94 | 1 | |
| 16 | 529527701 | SCREW | 09040–00.600.06 | 1 | |
| 17 | 546364101 | O-RING | 09064–00.650.06 | 1 | |
| 18 | 538668901 | MANOMETER | 09064–00.650.00 | 1 | |
| 19 | 538923801 | SCREW | 09050–00.600.87 | 1 | |
| 20 | 546170001 | SCREW | 09057–00.600.86 | 1 | |
| 21 | 547104601 | HUIS COMPL. | 09066–00.950.00 | 1 | |
| 22 | 546365701 | DEKSEL | 09064–00.600.26 | 1 | |
| 23 | 538664301 | DIFFUSER | 09050–00.623.00 | 1 | |
| 24 | 537648801 | WAAIER | 09056–00.630.00 | 1 | |
| 25 | 538832101 | O-RING | 09050–00.600.97 | 1 | |
| 26 | 546286801 | AFDICHTING | 09050–00.600.86 | 1 | |
| 27 | 537648701 | FLENS | 09050–00.600.01 | 1 | |
| 31 | 537649601 | VENTILATORKAP | 09050–00.610.21 | 1 | |
| 32 | 546285601 | AFDICHTING | 09050–00.600.88 | 1 | |
| 33 | 546042401 | O-RING | 09050–00.600.96 | 1 | |
| 34 | 538923501 | SCHAKELAAR | 09050–00.600.16 | 1 | |
| 35 | 546391202 | HUIS COMPL. | 09066–00.680.00 | 1 | |
| 37 | 538663801 | BASE | 09064–00.600.16 | 1 | |
| 38 | 538664701 | HUIS | 09064–00.600.36 | 1 | |
| 40 | 538664601 | TOETSENBORD | 09064–00.600.46 | 1 | |
| 42 | 538664801 | HUIS | 09064–00.600.41 | 1 | |
| 43 | 529770001 | VERBINDER | 01762–00.600.81 | 1 | |
| 44 | 537649001 | ELEKTRONISCHE KIST | 09050–00.600.11 | 1 | |
| 46 | 598964301 | O-RING | 01766–00.610.06 | 1 | |
| 47 | 529799301 | CONDENSATOR | 01764–00.610.21, (10 µF, 450V) | 1 | |
| 48 | 546002401 | KABELSET | 09050–00.910.00, EU Version | 1 | |
| 48 | 546002501 | KABELSET | 09050–62.910.00, CH Version | 1 | |
| 48 | 547248301 | KABELSET | 09064–53.910.00, ZA Version | 1 | |
| 51 | 546177401 | AFDICHTING | 09050–00.600.95 | 1 | |
| 52 | 538663901 | DEKSEL | 09064–00.600.31 | 1 | |
| 53 | 538996501 | O-RING | 09058–00.640.06 | 1 | |
| 54 | 578461401 | SCREW | 01707–00.900.17 | 1 | |
| 57 | 546960901 | BASE ASSY | 09064–00.612.00 | 1 | |
| 58 | 546170301 | O-RING | 09064–00.610.11 | 1 | |
| 59 | 546364601 | KLEM | 09064–00.600.96 | 1 | |
| 60 | 546354401 | TANK COMPL. | 09064–00.611.00 | 1 | |
| 61 | 538665501 | DEKSEL | 09064–00.610.16 | 1 | |
| 62 | 537662901 | BUFFER | 09050–00.640.06 | 1 | |

KESSEN DER SPEK
MACHINES ★ TER AAR